SERVO MOTOR

130 Series Motor Specification

Motor model	WE130M-10025S☆△	WE130M-13025S☆△	WE130M-15025S☆△
Rated power (kW)	1.0	1.3	1.5
Rated torque (N·m)	4	5	5
Rated speed (r/min)	2500	2500	2500
Brake	Optional	Optional	Optional
LA without Brake (mm)	166	171	171
LA with Brake (mm)	226	231	231

Remark:

☆: A1-17 bit single Magnetic encoder; C1-17 bit Multi Magnetic encode; D2- 23bit Multi Optical encoder

△: F-sealed; G-sealed & Brake
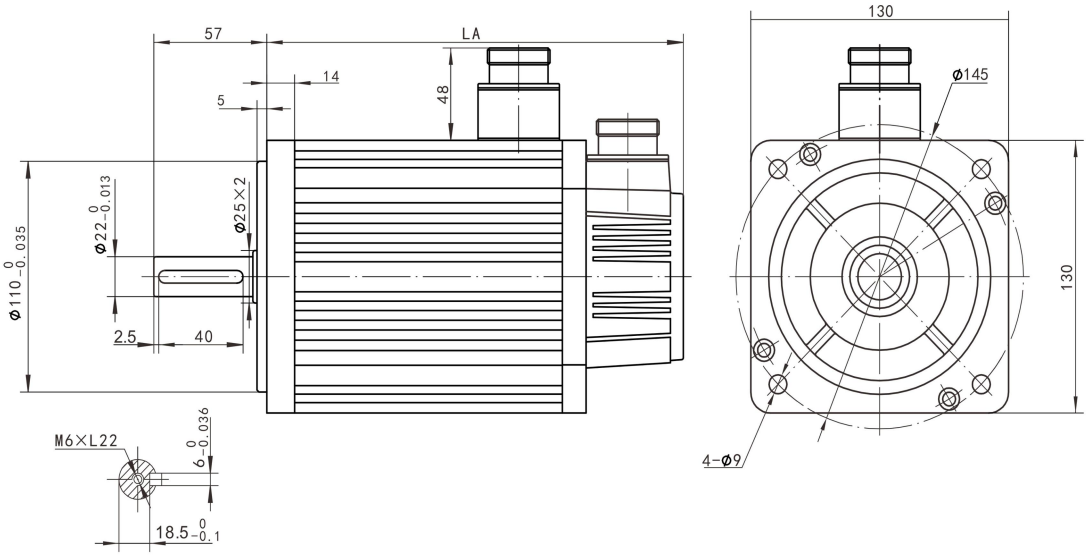
-L: Connector type